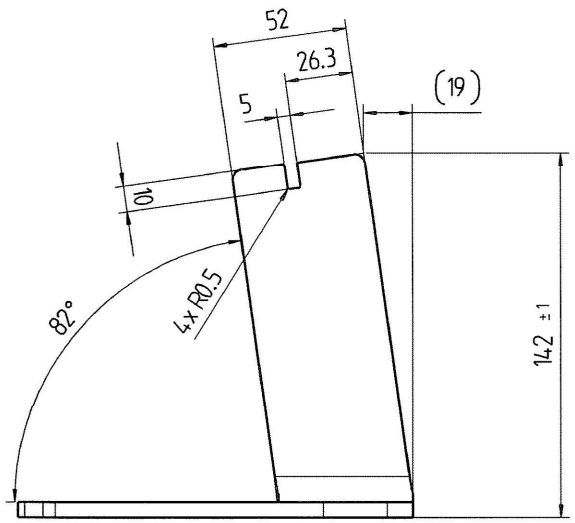

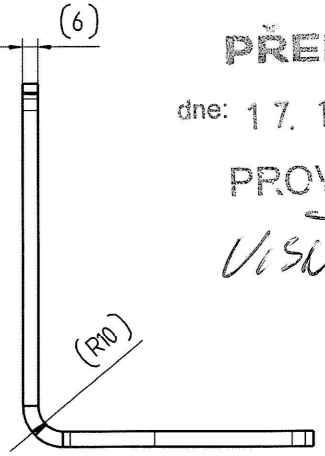

PŘEKLAD
dne: 17. 12. 2014
PROVEDL/A
VIŠŇA

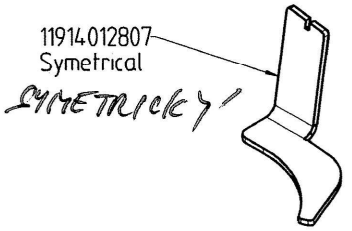

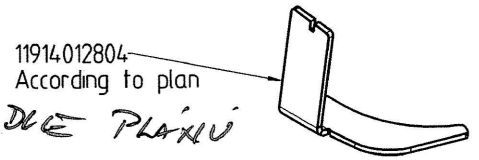

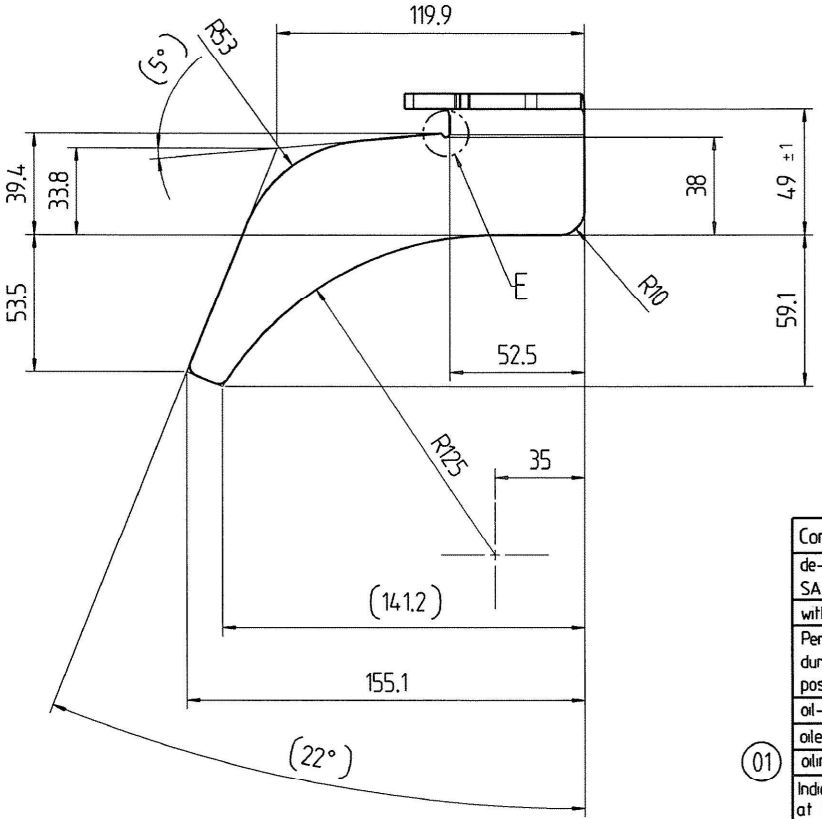

Detail E
2:1

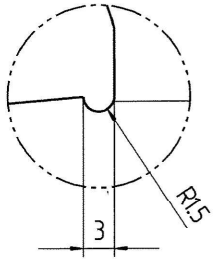

- 2 -03- 2015
ARCHIV
1

NZ 14/01402

NOTA : TLOUŠŤKA MAT.
- Metal sheet thickness : 6 mm
- Radii without dimension : R = 4
- Bend radii : R = 10

NEUVÁT. RADIUSY
RADIUS OHYBU

FL00132.pr1

LASER cutting tolerances				
NOTA : min cutting radius without dimensions R = 1 mm unless otherwise specified				
≤ 30	30< ≤ 120	120< ≤ 400	400< ≤ 1000	1000 <
± 0,5	± 0,8	± 1,0	± 1,5	± 2,0

+0.5 / -0.5

Condition at time of delivery	
de-scaled (degree of purity SA 2 1/2 acc. ISO 8501-1)	X
without burrs acc. WN 11310	
Permissible top-end rounding during flame cutting (also positive bead acc. WN 10572)	
oil-free / free of grease	
oiled	
oiling permissible	X
Indicate the required condition at time of delivery with an X.	

01

First angle projection

General tolerance (GT) in mm
Size range

	> 30	> 120	> 400	> 1000
≤ 30	≤ 120	≤ 400	≤ 1000	

GT coarse

L	1	2	2	3	4
◁	1	2	4	6	

Lengths (L) and angle (⊥ ∠) = ± GT

Tolerance Symbols ISO 1101
- ○ roundness = 1/2ø-Tol.
- ▱ straightness/flatness = GT
- ◎ concentricity/run out = GT
- ≡ symmetry = GT
- / / parallelism = GT
- ⊕ position = GT

Languages: en,fr

Index	alteration	Change no	Fit	Toler.
01	Oiled --> Oiled permissible	T48720		

Inspection dim.
Auxillary dim. ( )

	Date	Name
Drawn	10.12.2013	J.Fonteny
Checked	13.12.2013	F.Praust
Auth'd	20.12.2013	R.Pelletier
M.check.	13.1.2014	J.LeCesne

Material: S235JR following EN10025-2
Blank no:
Title: reinforcement right
Drawing number: / / 11914012804
Weight: in kg 0.7
PROD.
Scale 1:2
Sheet: 1 of: 1
Repl.
Orig.

Confidential document
Refer to protection notice ISO 16016

Released

11914012804d001 A3